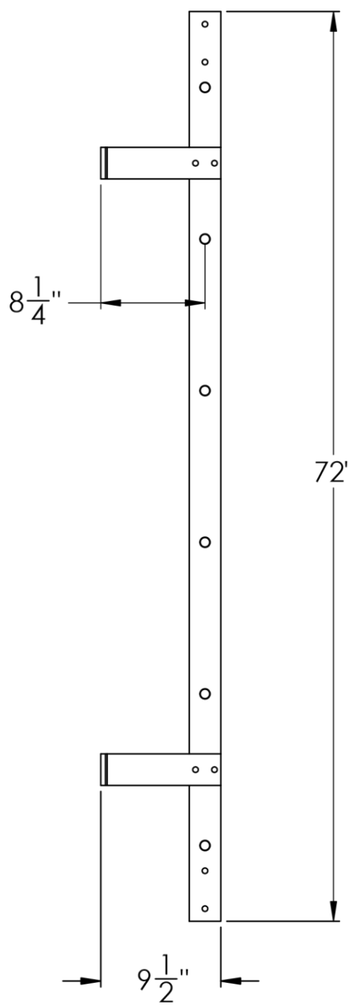

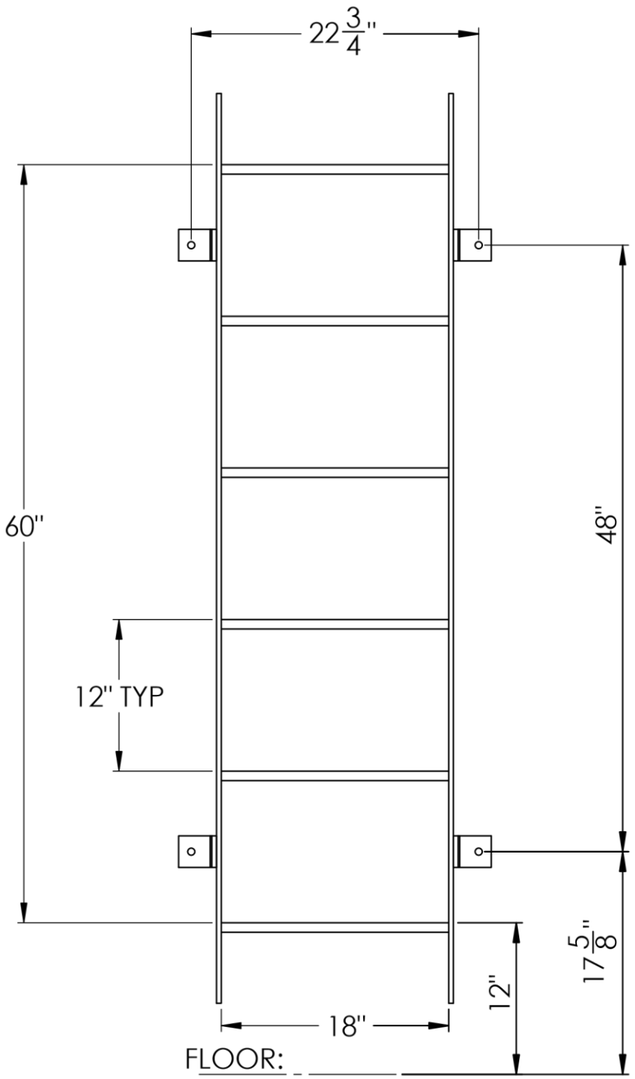

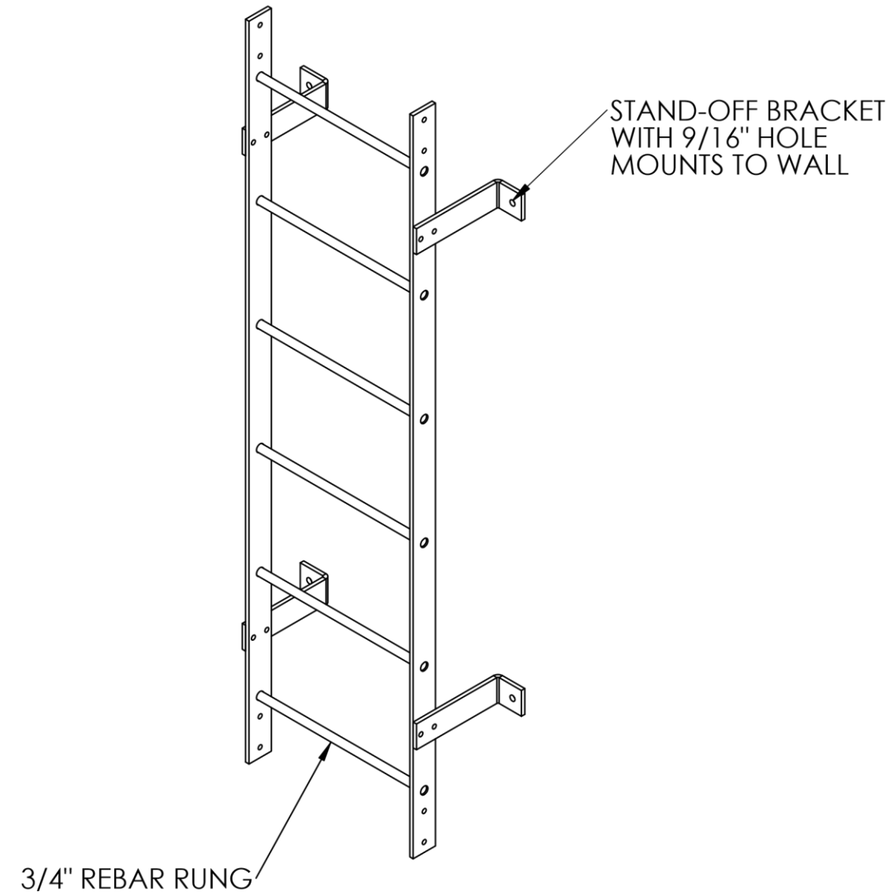

350 LB CAPACITY

APPROVAL SIGNATURE: DATE:			TITLE: WLFS0106-Y	
PROPRIETARY AND CONFIDENTIAL THE INFORMATION CONTAINED IN THIS DRAWING IS THE SOLE PROPERTY OF THE MANUFACTURER. ANY REPRODUCTION IN PART OR AS A WHOLE WITHOUT THE WRITTEN PERMISSION OF THE MANUFACTURER IS PROHIBITED.	LEAD TIME		SIZE B	DWG. NO. WLFS0106-Y	REV 00
	MATERIAL Steel FINISH Gray DO NOT SCALE DRAWING	DRAWN KSR 5/23/22	SCALE:12	WEIGHT: 63.388	SHEET 1 OF 1